SAMSUNG CONFIDENTIAL
THIS DOCUMENT CONTAINS CONFIDENTIAL
AND PROPRIETARY INFORMATION OF
SAMSUNG ELECTRONICS CO'S PROPERTY.
DO NOT DISCLOSE TO OR DUPLICATE FOR OTHERS
EXCEPT AS AUTHORIZED BY SAMSUNG.

SM-A510Y REV0.2

2015.11.30

sheet01 : GSM / WCDMA / LTE RF (MAIN)
sheet02 : GSM / WCDMA / LTE RF (SUB)
sheet03 : GPS, BT/WIFI, NFC
sheet04 : AP
sheet05 : PMIC, eMMC, IF PMIC, SIM&SD, MST, MOTOR, BAT CON
sheet06 : AUDIO, BTP, MST
sheet07 : CAMERA, OCTA, SENSOR, IF CON

Samsung Confidential

SAMSUNG CONFIDENTIAL
THIS DOCUMENT CONTAINS CONFIDENTIAL
AND PROPRIETARY INFORMATION OF
SAMSUNG ELECTRONICS CO'S PROPERTY.
DO NOT DISCLOSE TO OR DUPLICATE FOR OTHERS
EXCEPT AS AUTHORIZED BY SAMSUNG.

#1 RF

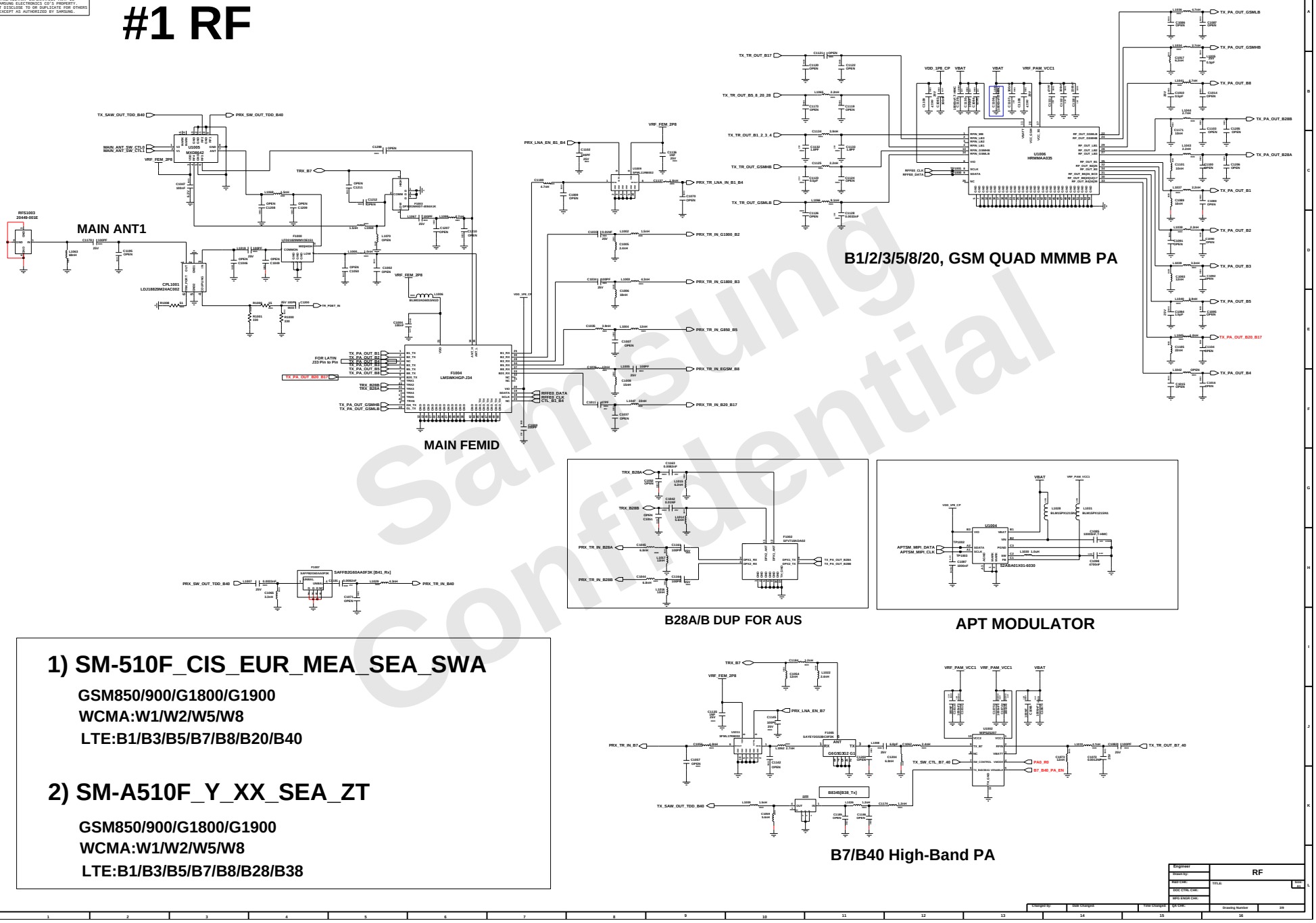

1) SM-510F_CIS_EUR_MEA_SEA_SWA

GSM850/900/G1800/G1900
WCMA:W1/W2/W5/W8
LTE:B1/B3/B5/B7/B8/B20/B40

2) SM-A510F_Y_XX_SEA_ZT

GSM850/900/G1800/G1900
WCMA:W1/W2/W5/W8
LTE:B1/B3/B5/B7/B8/B28/B38

Samsung Confidential

Engineer	RF
Design Mgr	
R&D CHK	TITLE:
DOC CTRL CHK	
MFG ENGR CHK	
QA CHK	Drawing Number: 3/9

Changed By | Date Changed | Total Changed

SAMSUNG CONFIDENTIAL
THIS DOCUMENT CONTAINS CONFIDENTIAL PROPRIETARY INFORMATION THAT IS SAMSUNG ELECTRONICS CO'S PROPERTY. DO NOT DISCLOSE TO OR DUPLICATE FOR OTHERS EXCEPT AS AUTHORIZED BY SAMSUNG.

DRX

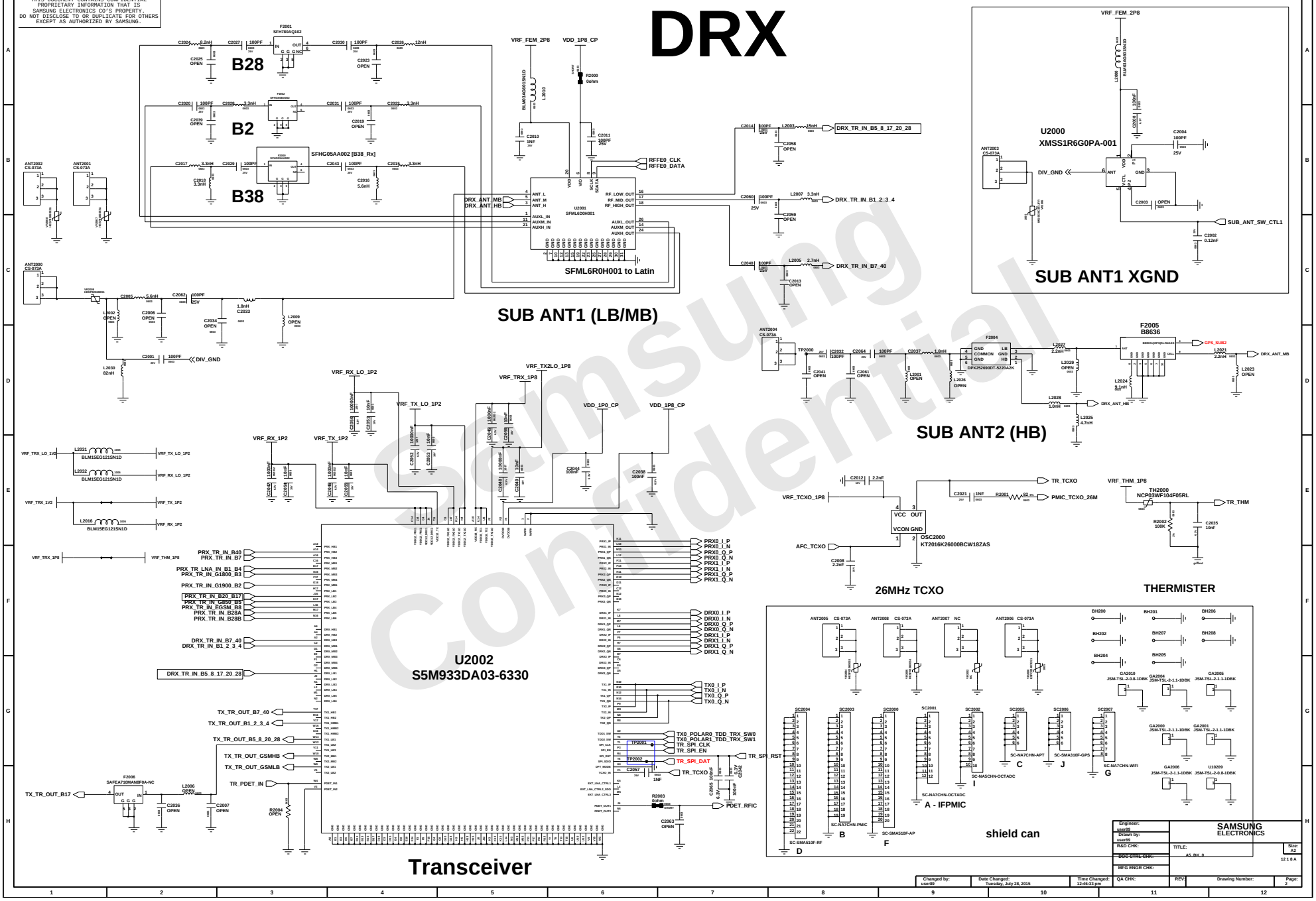

Samsung Confidential

SAMSUNG CONFIDENTIAL
THIS DOCUMENT CONTAINS CONFIDENTIAL
AND PROPRIETARY INFORMATION OF
SAMSUNG ELECTRONICS CO'S PROPERTY.
DO NOT DISCLOSE TO OR DUPLICATE FOR OTHERS
EXCEPT AS AUTHORIZED BY SAMSUNG.

< GPS >

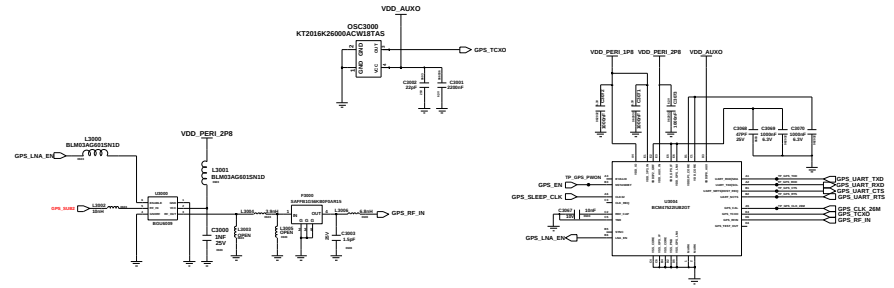

<NFC>

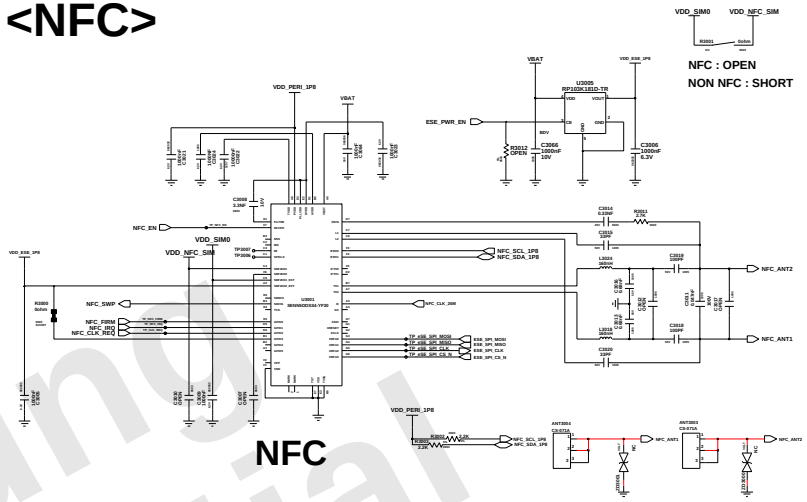

<BT/WIFI>

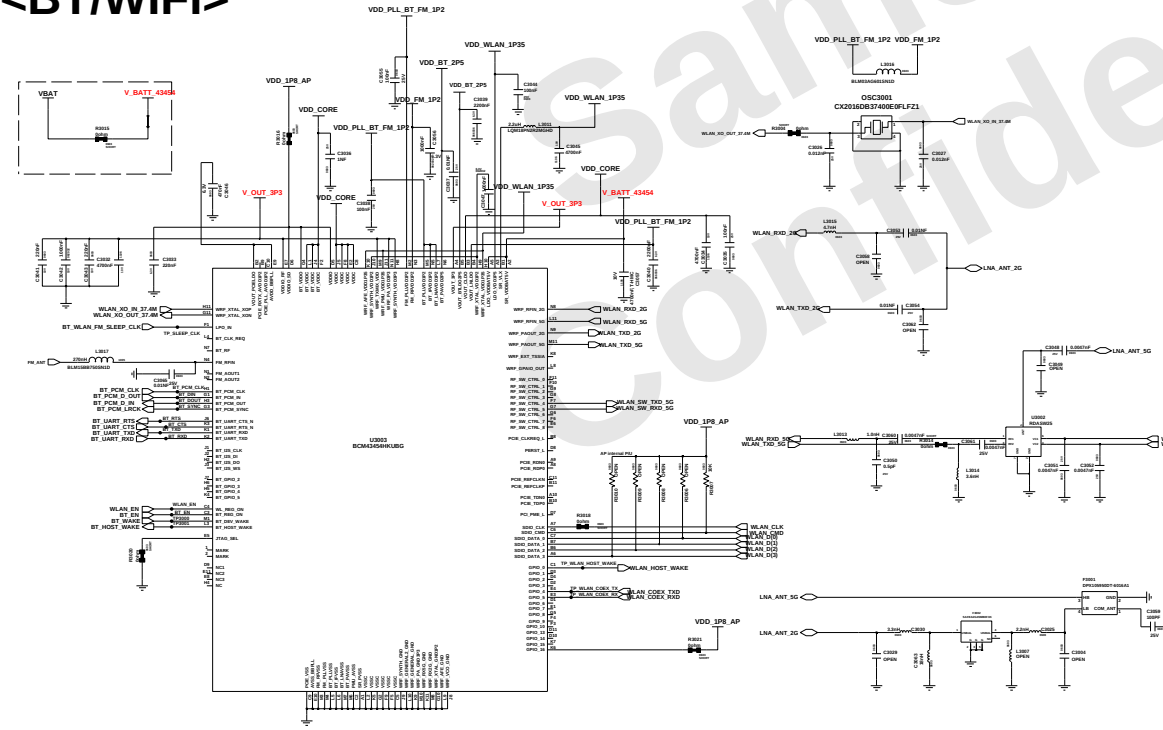

<TDMB_KOR>

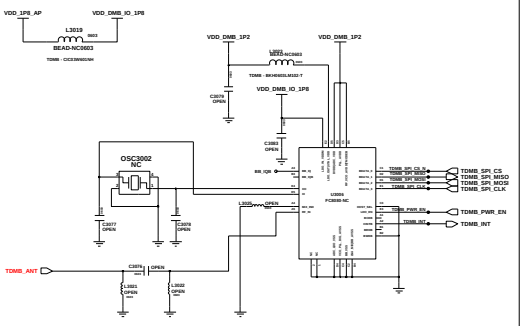

	GPS / NFC / BT / WIFI

Samsung Confidential

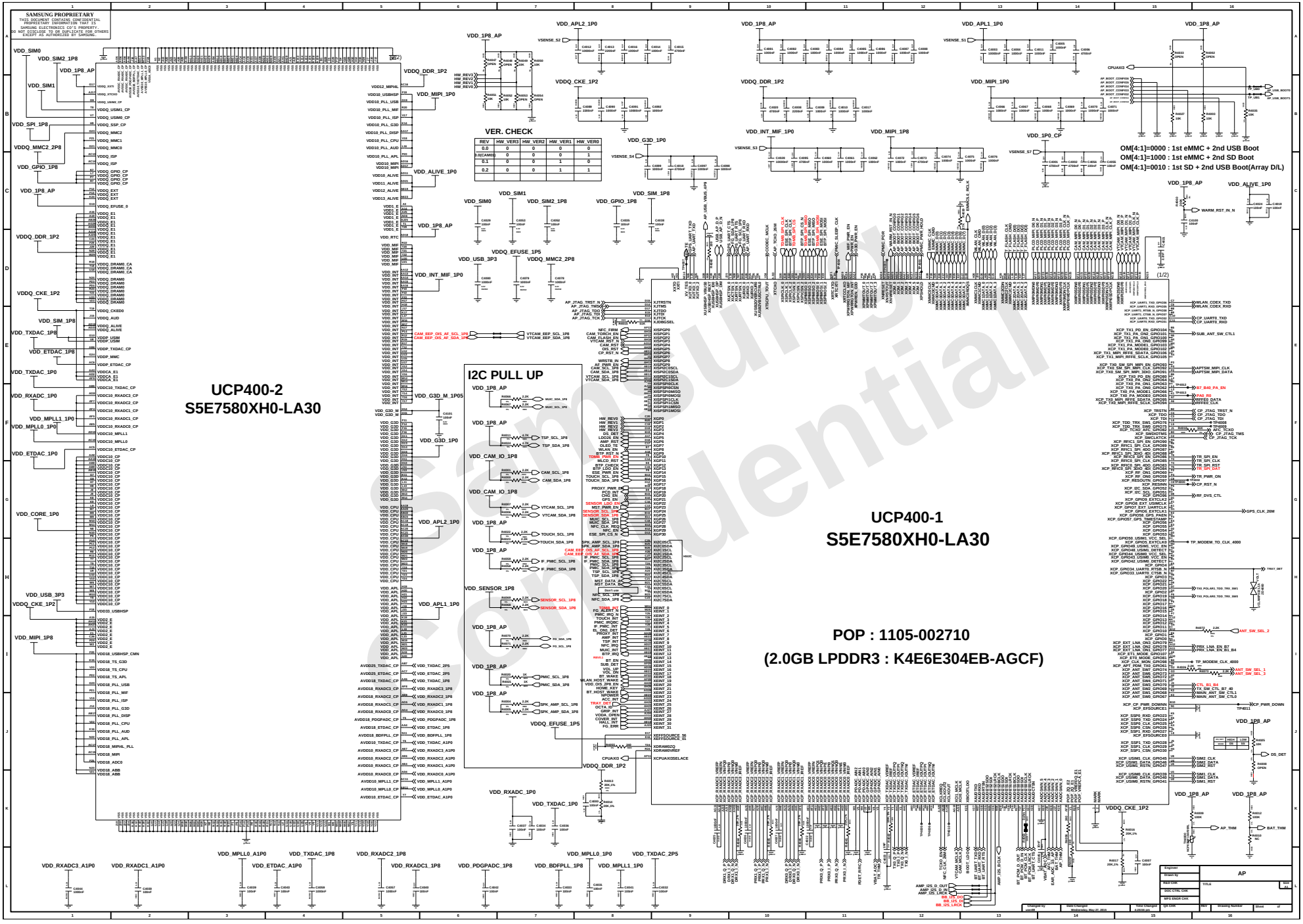

user89|swcad89|10.253.20.115|20151210-160304

SAMSUNG CONFIDENTIAL
THIS DOCUMENT CONTAINS CONFIDENTIAL
PROPRIETARY INFORMATION THAT IS
SAMSUNG ELECTRONICS CO'S PROPERTY.
DO NOT COPY OR DISTRIBUTE WITHOUT WRITTEN
SUCH AS AUTHORIZED BY SAMSUNG.

POWER

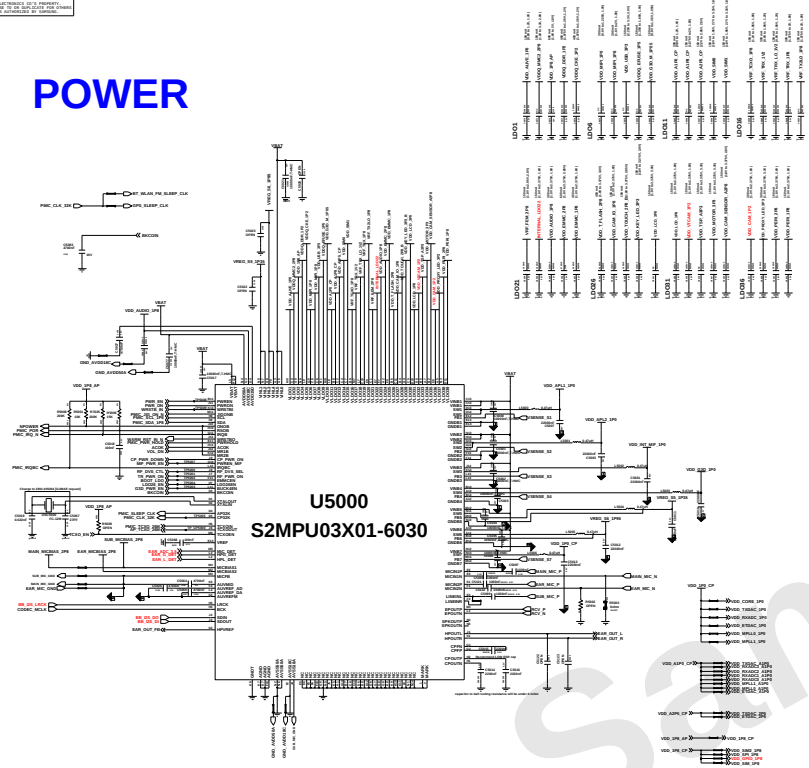

U5000
S2MPU03X01-6030

PMIC

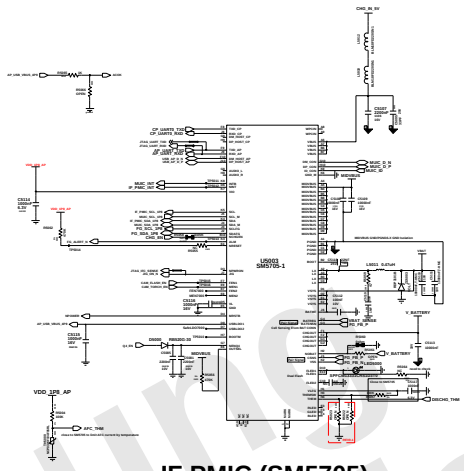

U5003
SM5705-1

IF PMIC (SM5705)

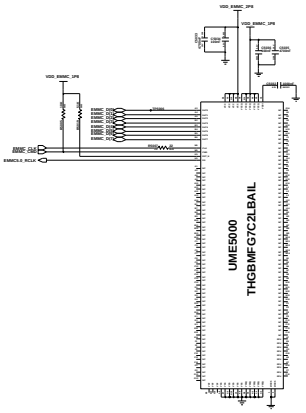

UME5000
THGBMFG7C2LBAIL

16GB eMMC 5.0 MLC

MOTOR(9pi 3.4T) LDO & CON

SIM & SD

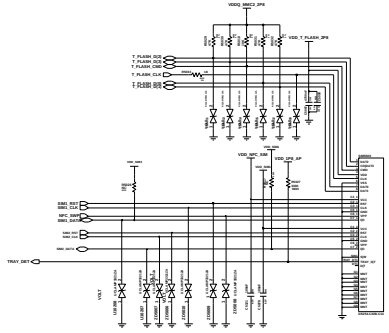

Battery Connector

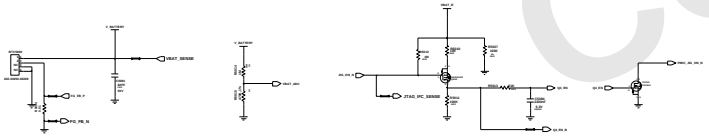

MST

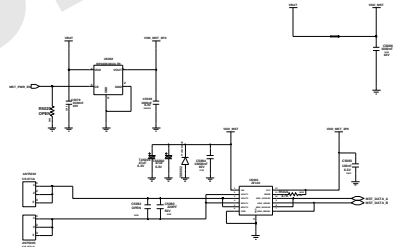

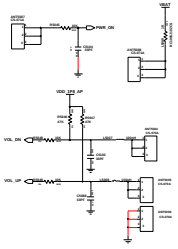

PWR KEY / VOL KEY

PCB JTAG

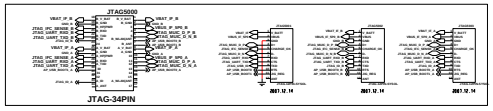

JTAG-34PIN

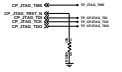

CP JTAG

AP JTAG

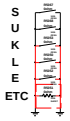

S
U
K
L
E
ETC

Samsung Confidential

SAMSUNG CONFIDENTIAL
THIS DOCUMENT CONTAINS CONFIDENTIAL
AND PROPRIETARY INFORMATION OF
SAMSUNG ELECTRONICS CO'S PROPERTY.
DO NOT DISCLOSE TO OR DUPLICATE FOR OTHERS
EXCEPT AS AUTHORIZED BY SAMSUNG.

AUDIO

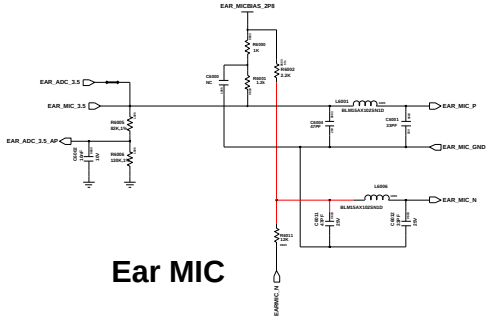

Ear MIC

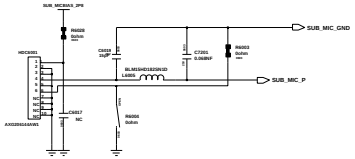

SUB MIC

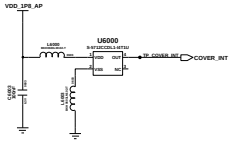

Cover Detect

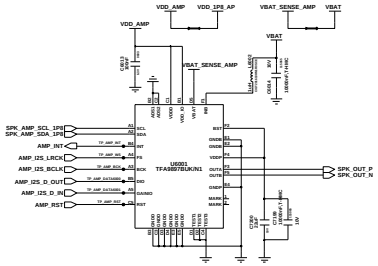

Audio amp

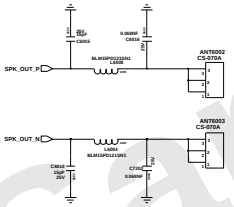

SPK Connector

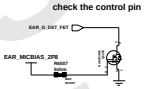

EAR DETECT

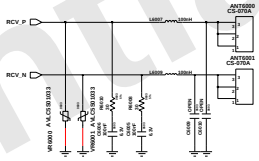

RCV

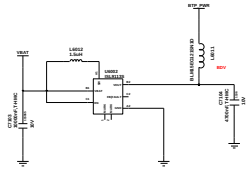

BTP DC-DC

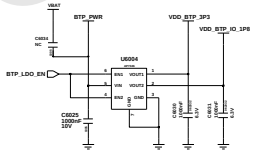

BTP OCP and PWR

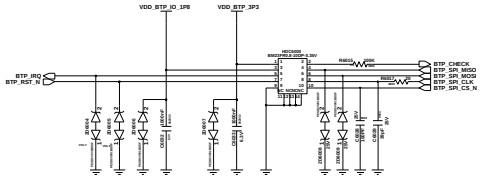

BTP IF Conn

Samsung Confidential

Engineer:	SAMSUNG ELECTRONICS
Design by:	
Check by:	
REF CHK:	TITLE:
DOC CTRL CHK:	
MFG ENGR CHK:	
QA CHK:	REV: Drawing Number: Page:

Changed by: | Date Changed: Wednesday, May 27, 2015 | Time Changed: 4:28:03 pm

SAMSUNG CONFIDENTIAL
THIS DOCUMENT CONTAINS CONFIDENTIAL AND PROPRIETARY INFORMATION OF SAMSUNG ELECTRONICS CO'S PROPERTY. DO NOT DISCLOSE TO OR DUPLICATE FOR OTHERS EXCEPT AS AUTHORIZED BY SAMSUNG.

CAMERA

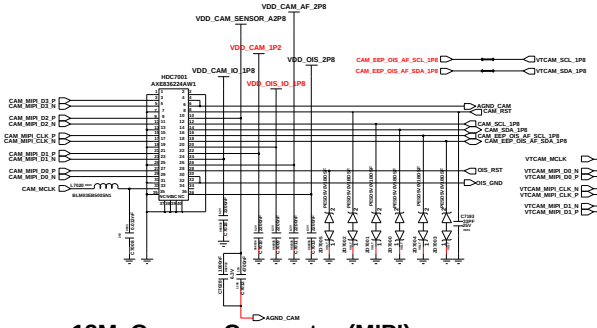

13M_Camera Connector (MIPI)

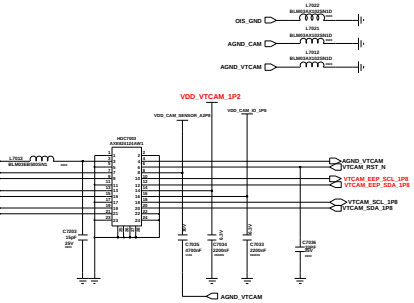

VT_CAMERA (5M)

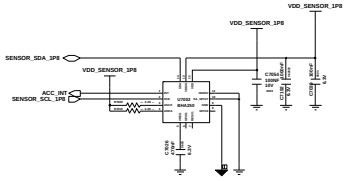

Sensor Hub integrated Accel Sensor

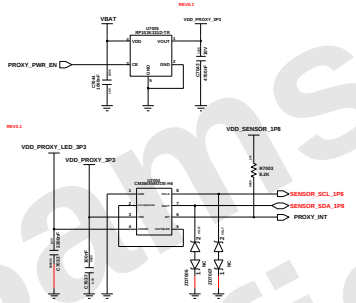

Proxy +RGB Sensor

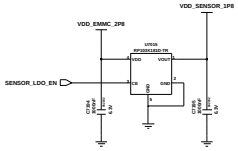

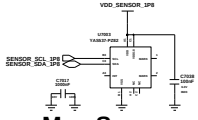

Mag Sensor

DISPLAY

OCTA CONNECTOR

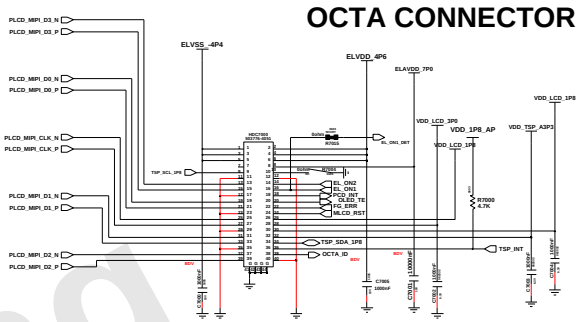

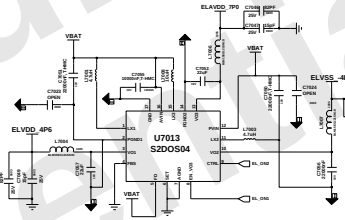

HD OCTA DC-DC

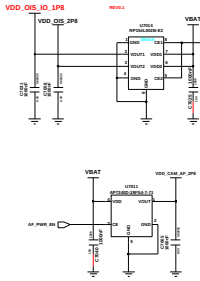

OIS AF LDO

IF SUB PBA Connector

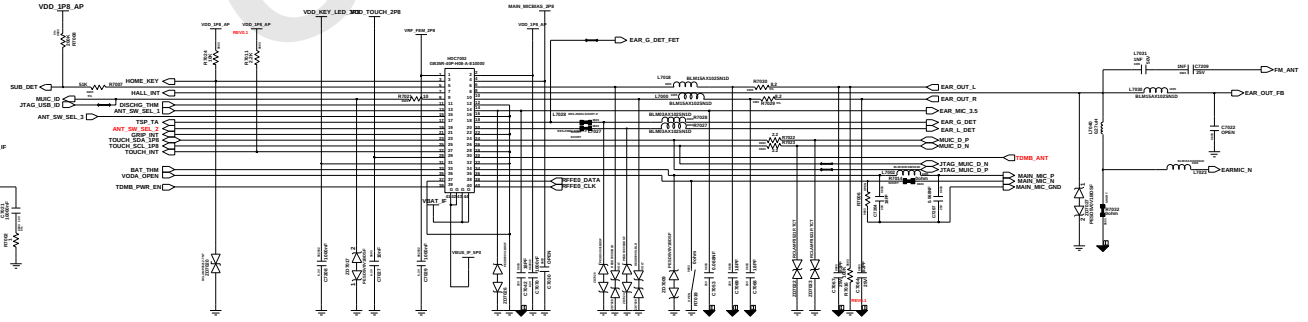

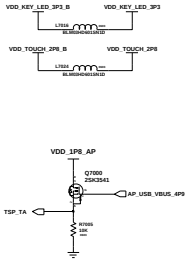

Samsung Confidential

Setup(2015-05-20)_HHP

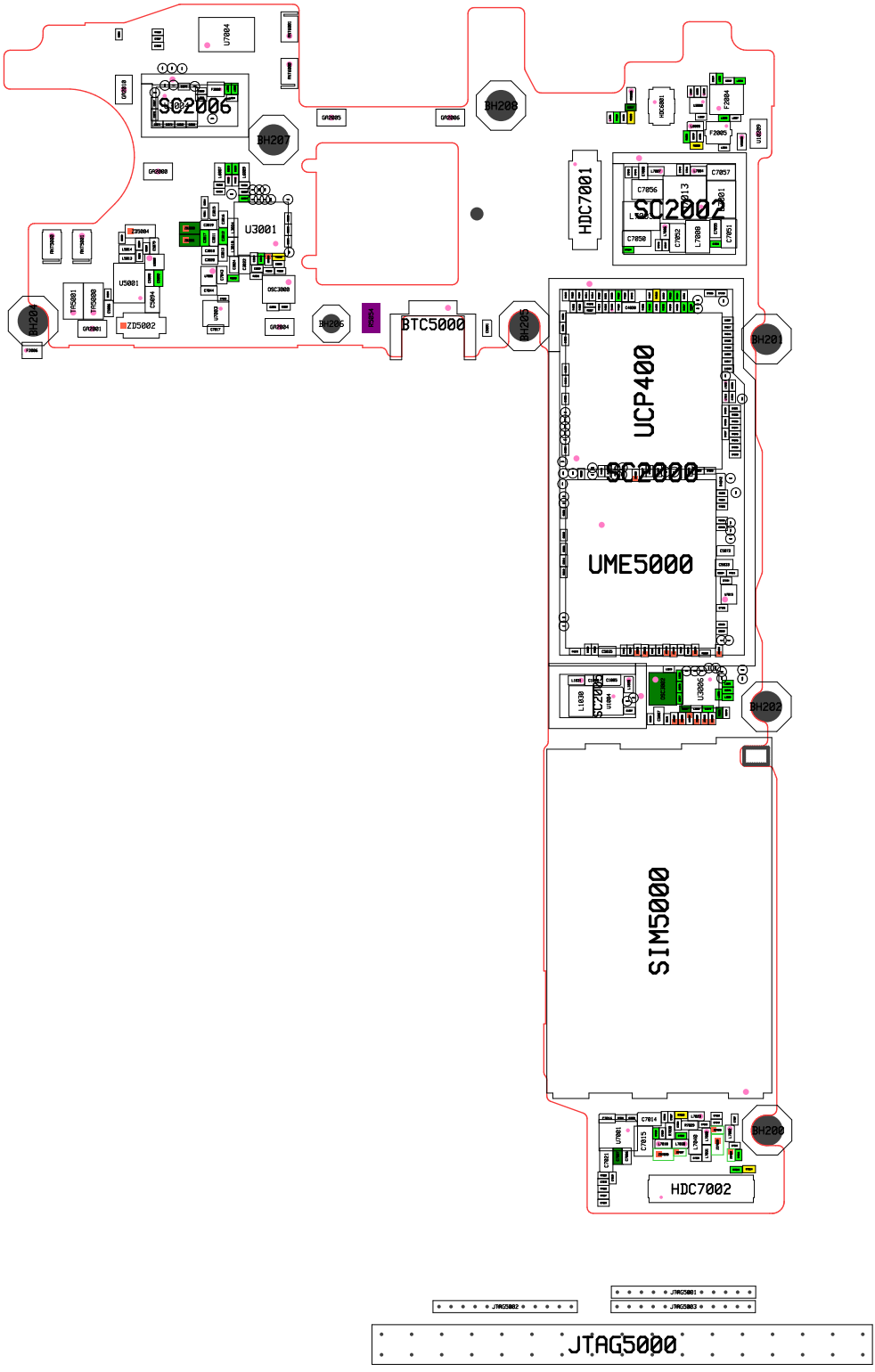

2007-010856(R5054) : Check! Bottom Surface of Component

Setup(2015-05-20)_HHP

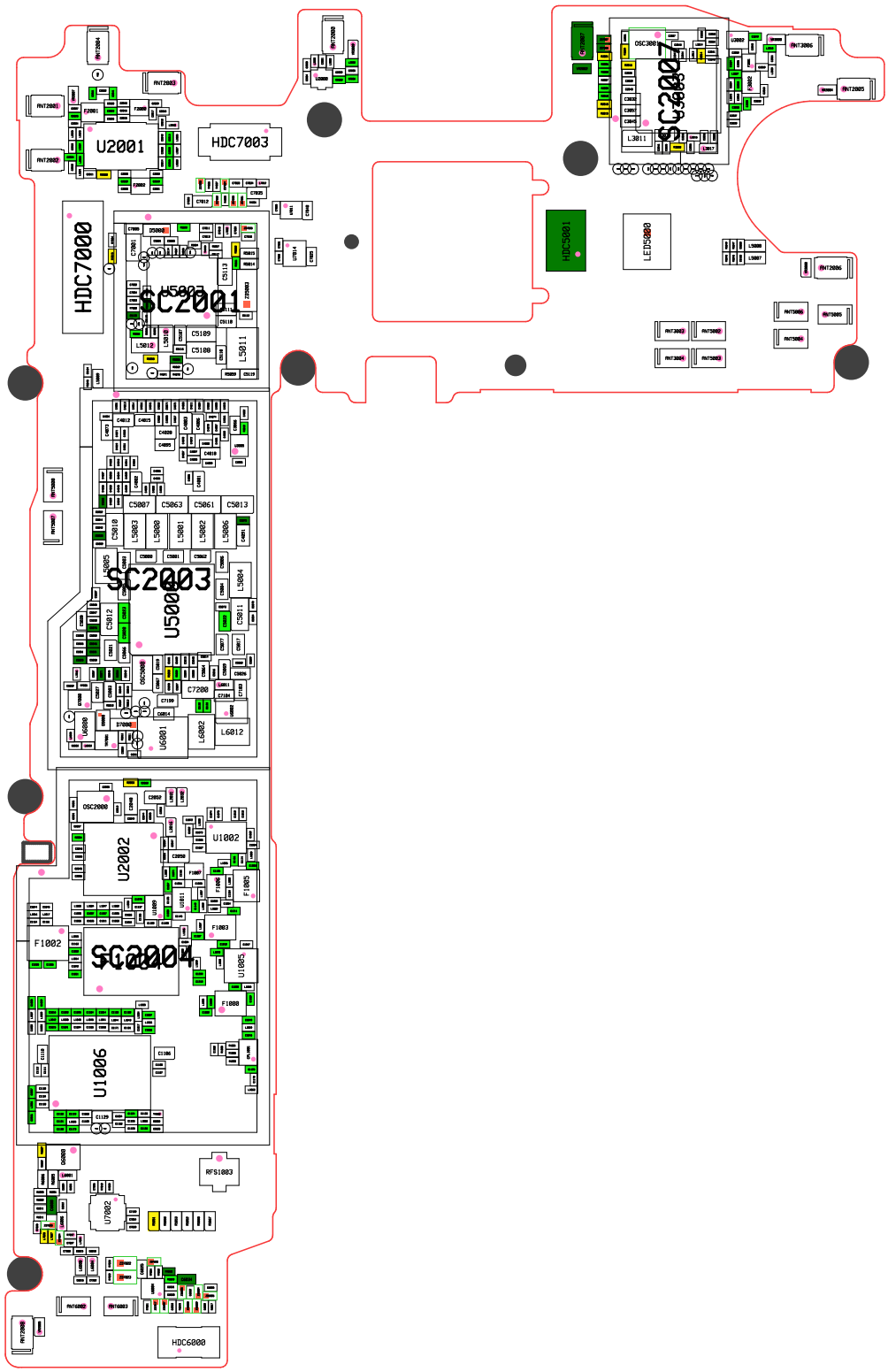

2007-010856(R5054) : Check! Bott